ATK TEE STRAINER

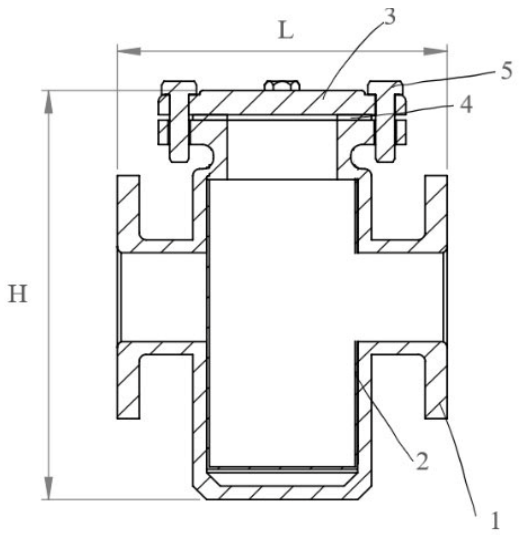

Structure	No	Part	Material
Ductile iron Epoxy coating Working pressure: PN10/16	1	Body	Ductile iron; flange standard: BS
	2	Filter	SUS 304
	3	Cover	Ductile iron
	4	Gasket	EPDM
	5	Bolts and nuts	Galvanized steel

Dimension (mm):

Size	L	H
DN 50	230	290
DN 65	245	300
DN 80	255	330
DN 100	275	360
DN 125	315	426
DN 150	370	505
DN 200	435	570

Manufacturer: HCL SERVICE AND TRADING COMPANY LIMITED
Add. No 12, lane 104/3, Dinh Cong, Phuong Liet, Thanh Xuan, Hanoi, Vietnam
Tel: +84 24.6 674 0333 ; E-mail: hclvietnam2015@gmail.com;
Website: www.hcl.vn